GRANDE AT PALM BEACH GARDENS

LYING IN SECTIONS 5 AND 6, TOWNSHIP 42 SOUTH, RANGE 43 EAST,
CITY OF PALM BEACH GARDENS, PALM BEACH COUNTY, FLORIDA
FEBRUARY - 2001
(SHEET 3 OF 4 SHEETS)

181

STATE OF FLORIDA
COUNTY OF PALM BEACH

THIS PLAT WAS FILED
FOR RECORD AT_____M.
THIS DAY OF_____
2001 AND DULY RECORDED IN
PLAT BOOK No._____ON
PAGES_____THROUGH_____

DOROTHY H. WILKEN
CLERK CIRCUIT COURT

BY: _____D.C.

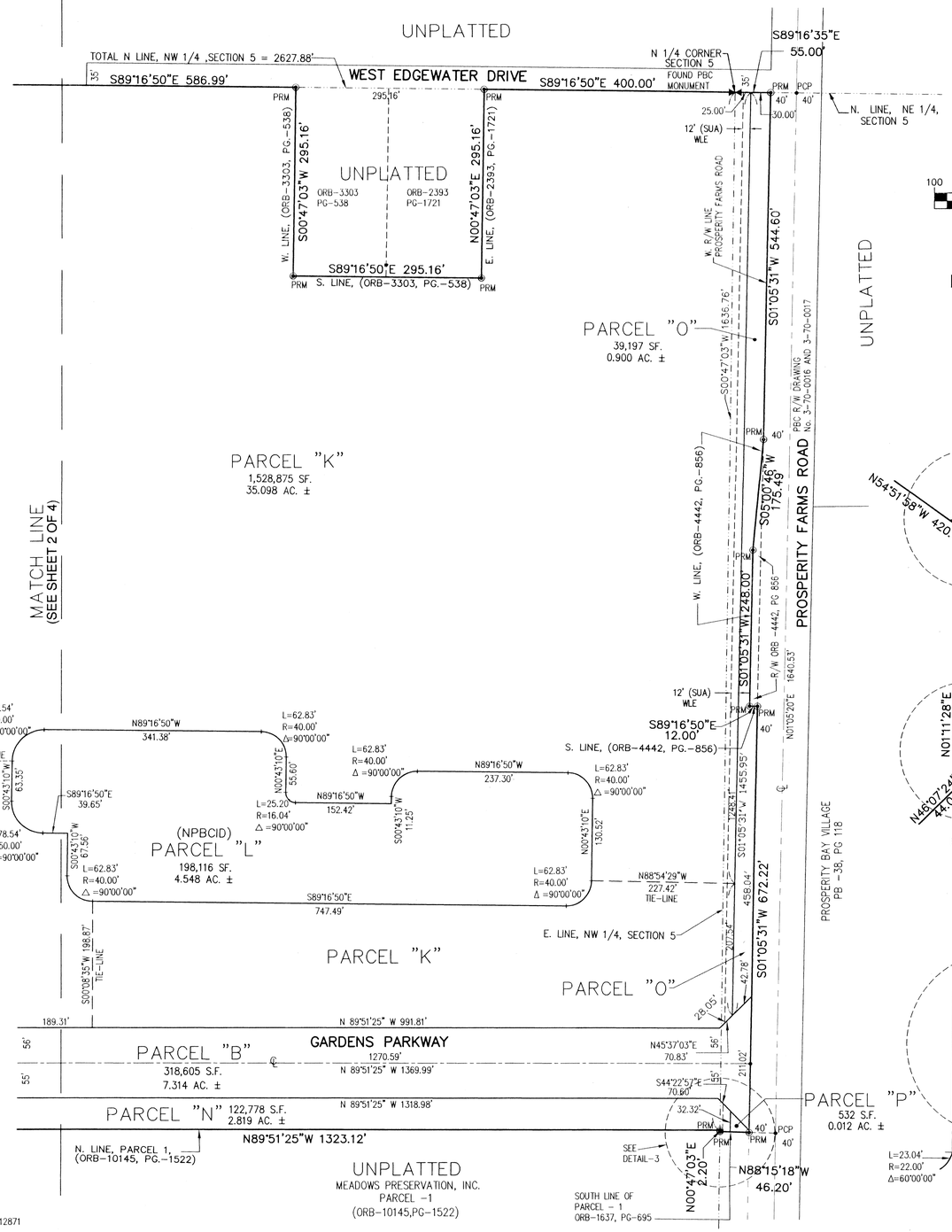

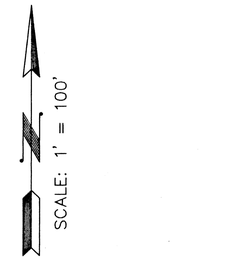

GRAPHIC SCALE
100 0 50 100 200 400
(IN FEET)
1 inch = 000 ft.

-PREPARED BY-
PENINSULA LAND SURVEYORS, INC.
LAND DEVELOPMENT CONSULTANTS
SURVEYORS - PLANNERS
CONSTRUCTION LAYOUT
13113 NW 42ND AVENUE, 2ND FLOOR
MIAMI, FLORIDA 33054
PHONE (305) 687-9191 FAX (305) 687-9190

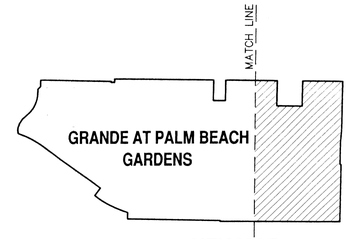

KEY MAP
N.T.S

AREA TABULATION

PARCEL	SQUARE FEET	ACRES±
A	184,695	4.240
B	318,605	7.314
C	72,480	1.664
D	299,269	6.870
E	274,283	6.297
F	219,581	5.041
G	246,551	5.660
H	29,929	0.687
I	1,223,186	28.080
J	382,887	8.790
K	1,528,875	35.098
L	198,116	4.548
M	52,678	1.209
N	122,788	2.819
O	39,197	0.900
P	532	0.012
TOTAL	5,193,652	119.230

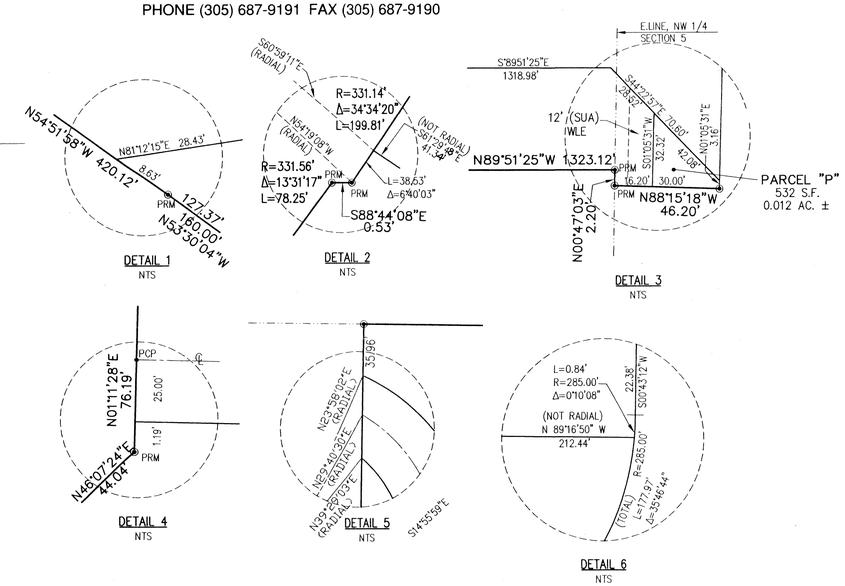

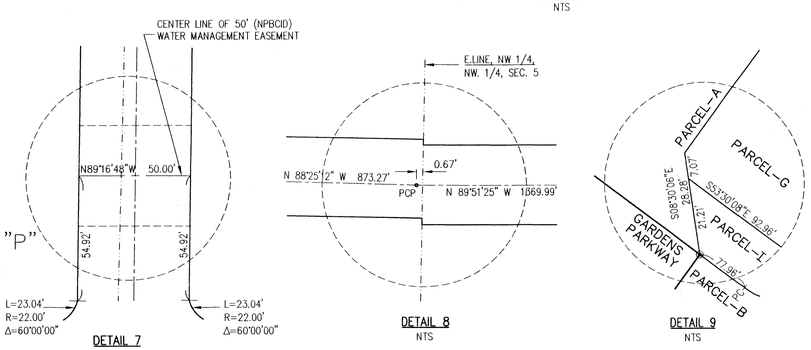

NOTE

SEE SHEET 4 OF 4 FOR UNDERLYING EASEMENTS.

LEGEND:

S.F. - SQUARE FEET
AC. - ACRES
± - MORE OR LESS
COR - CORNER
DIST. - DISTANCCE
℄ - CENTERLINE
- POINT OF CURVATURE AND/OR POINT OF TANGENCY
PB - PLAT BOOK
PG - PAGE
FIP - FOUND IRON PIPE
RAD - RADIAL
ORB - OFFICIAL RECORD BOOK
NPBCID - NORTHERN PALM BEACH COUNTY IMPROVEMENT DISTRICT.
WMT - WATER MANAGEMENT TRACT
POC - POINT OF COMMENCEMENT
POB - POINT OF BEGINNING
SEC - SECTION
PBC - PALM BEACH COUNTY
RP - RADIUS POINT
O/S - OFFSET
R/W - RIGHT OF WAY
L - ARC LENGHT (DISTANCE)
Δ - CENTRAL ANGLE
R - RADIUS
WMME - WATER MANAGEMENT MAINTENANCE EASEMENT
NT - NOT TANGENT
PC - POINT OF CURVATURE
PT - POINT OF TANGENCY
NTS - NOT TO SCALE
⊙PRM - SET PERMANENT REFERENCE MONUMENT, 2" DIAMETER BRASS CAP IN 4"X4"X24" CONCRETE MONUMENT, STAMPED PENINSULA LAND SURVEYORS (PRM) RLS # 4277
∘PCP - SET PERMANENT CONTROL POINT PK-NAIL AND 1-1/2" BRASS WASHER, STAMPED (PCP) LB # 6454
CB - CHORD BEARING
CD - CHORD DISTANCE
WLE - WATER LINE EASEMENT
SUA - SEACOAST UTILITY AUTHORITY

REV. 12-6-01
REV. 11-14-01
REV. 11-6-01
REV. 5-18-01
REV. 3-28-01
JOB ORDER # 012871